COMMUNICATION - USING AND READING DRAWINGS

INTRODUCTION

Drawings and diagrams are the most important way of describing in detail products and systems. Engineers and designers must be able both to read and make drawings. It is important you learn the language of drawing so you can communicate fluently with other people. Finding a solution to a design problem or brief is often a challenging task. In every situation, there are many things to consider if the final solution is to satisfy and meet the need you have identified. When you are designing, you need to use a wide range of techniques and tools to help you analyse, record, develop and solve problems. It is impossible to keep all your ideas in your head so you must be able to use drawings to communicate with yourself and with others.

Different types of drawings have different purposes. There are three main reasons for using drawings.

DEVELOPING IDEAS

Sketches
These are used for getting ideas down on paper and are often very personal. To begin with, they are fairly rough as only you have to understand them. As your ideas develop, your sketches need to become more detailed and refined so you can discuss your ideas with others.

COMMUNICATING IDEAS

Pictorial views and diagrams
When an idea begins to looks promising, you need to draw it in more detail. This may be to give you a better idea of what it will look like or to check out the idea with the client or potential user. There are a range of drawing systems you can use to produce a pictorial view - isometric, axonometric or perspective, for example. If you want to show how various parts fit together, you might do an exploded drawing or a cut away view. Sometimes, a diagram is needed to show how a system will work or how a circuit will be laid out.

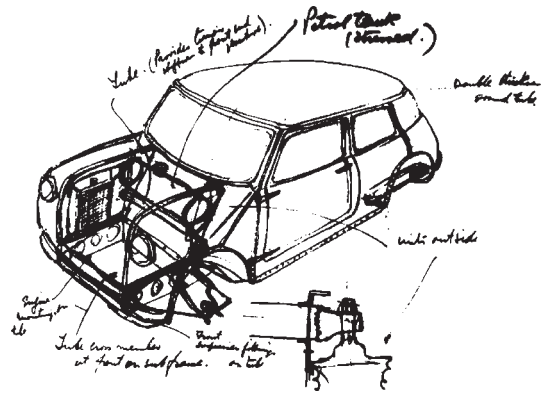

An original sketch for the British Leyland Mini

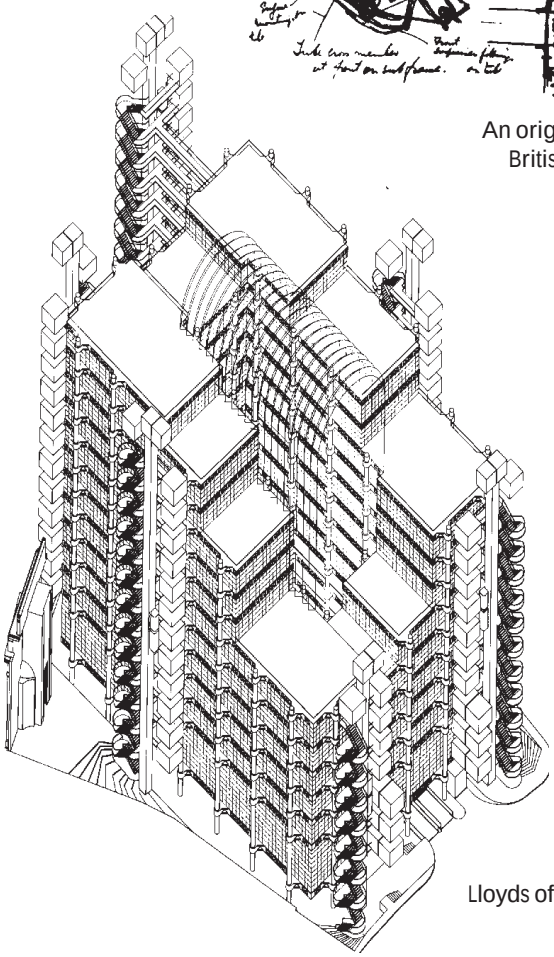

Lloyds of London

PRODUCTION DRAWINGS

Orthographic projection and detailed diagrams
When you have found the best solution, you need to establish the precise size of all the parts you have to make. The best way of doing this is to produce orthographic drawings. If the solution consists of several parts, each component has to be drawn separately so every detail can be shown and dimensioned. In addition there needs to be a general arrangement (GA) drawing to show the relationship of various parts. Orthographic projection is a precise language used by everyone to communicate the exact details of a product.

As a designer, you have to select which type of drawing is suitable for a particular task. Always ask yourself:

What will the drawing be used for?
Who will use the drawing?
Will they be able to understand the drawing?
Is it the best method of communication?

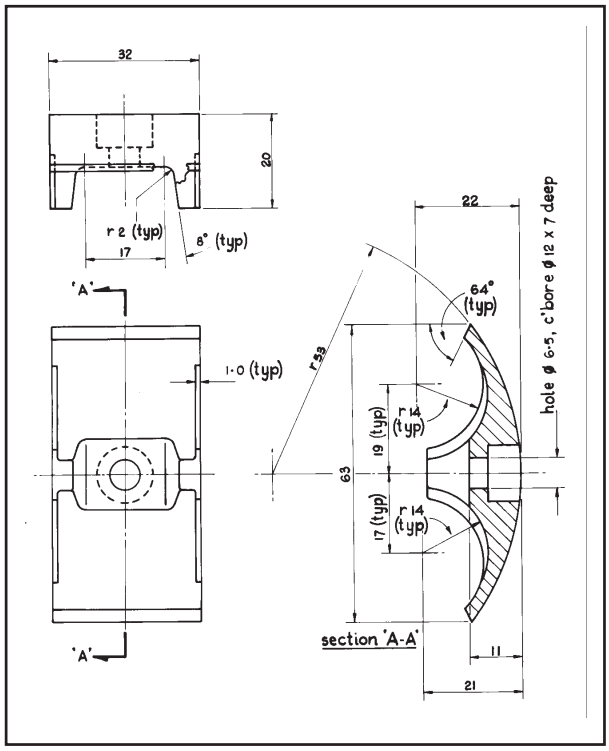

FREEHAND SKETCHING

- Freehand sketching is not easy but you can improve your technique by practising.
- Writing is a form of sketching which you practised until you had perfected it. Writing is made up of letters; once you learnt how to make the shapes, you could write.
- Sketching is very similar. Objects are formed from shapes which consist of lines. Practise sketching lines and shapes and you will soon be able to sketch objects.
- Most of the things you design can be broken down into geometric forms. If you can sketch these forms, you will be able to put them together to sketch the products you have designed. It's just like putting words together to write a sentence or story.

There are also a number of exercises you can do to improve the quality of your sketching.

Lines
When you are sketching straight lines, concentrate on the direction and do not worry about the length. It will be fixed by another line. Sketch a number of squares and rectangles made up of straight lines.

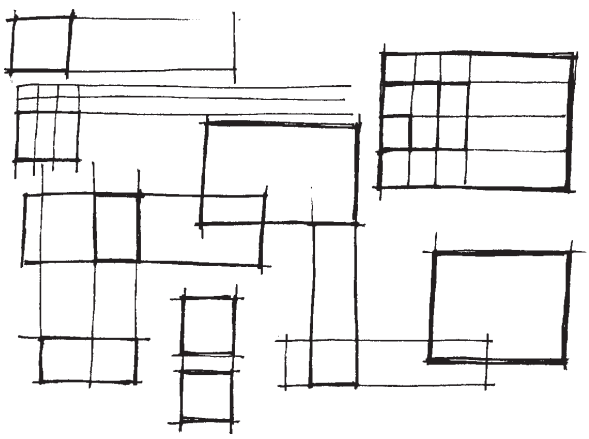

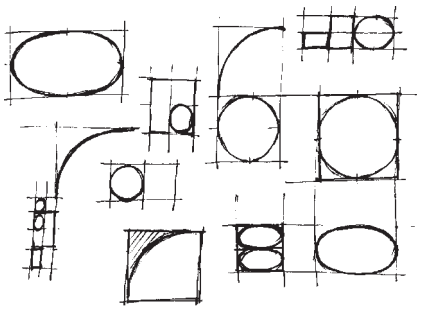

Curves
Start sketching circles and ellipses inside the squares and rectangles. If it helps, mark the points where the curve should touch the straight line. Let your pencil go round several times to define the shape.

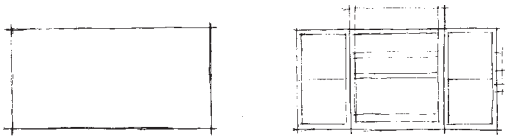

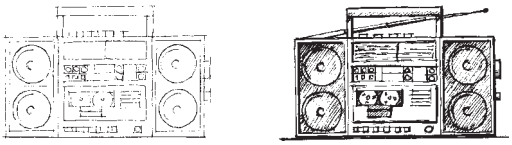

The shape of an object
When you sketch the shape of an object, you only show two dimensions such as the height and length.

- Start by drawing a rectangle into which the object will fit. This is important to get the proportions right.
- Next, divide the original rectangle into smaller rectangles into which the various parts fit.
- Now draw the shape of each of the parts and you have a hi-fi system.
- Add shading or texture to make the sketch look more realistic.

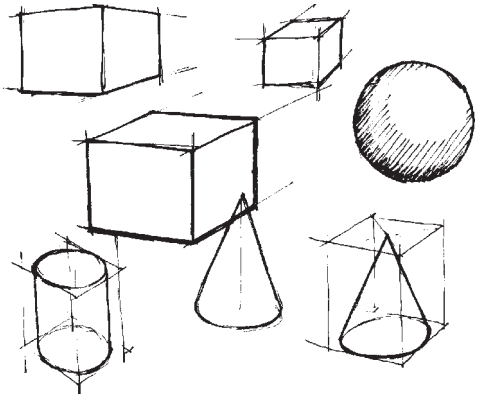

Geometric forms
Being able to sketch boxes, cylinders, cones and spheres is important.

- Try drawing boxes in perspective like the one shown.
- When you're sketching cylinders and cones, start by sketching the box in which they will fit.
- A sphere is a circle with shading.

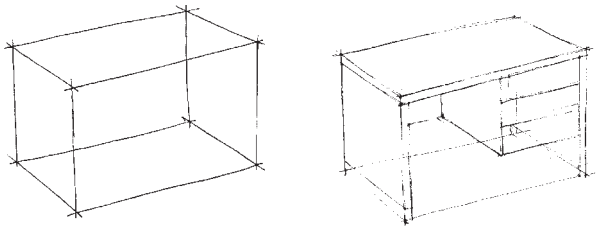

The form of an object
This type of sketch will show all three dimensions of an object.

- Start by sketching the box into which it will fit. This is often called crating the object.
- Divide the faces into the shapes which make up the object.
- Draw in the detail.
- Add shading or texture to make the sketch look more realistic.

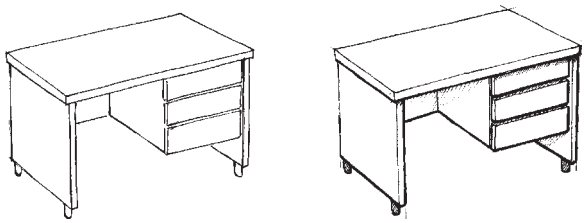

USING SKETCHES TO RECORD IDEAS

However many ideas you have, you will never think of all the possibilities. Looking at other peoples' designs and recording their ideas is not cheating. Most designs bring together ideas which already exist but in a different arrangement. Keep a sketch book and, whenever you see a clever or novel solution, record it using a sketch - you never know when it might be useful!

USING SKETCHES TO GENERATE IDEAS

Sketching is a means of thinking on paper as the design sheet shows. Ideas will blossom and develop from your initial sketches. Your eyes will also be opened to other possibilities and ideas.

USING SKETCHES TO EXPLORE SOLUTIONS

Once you have reached conclusions about the basic principles you will adopt to solve a problem, sketches allow you to explore many things. For example, you can investigate the possible arrangements of various parts or the possible way in which a component might be made.

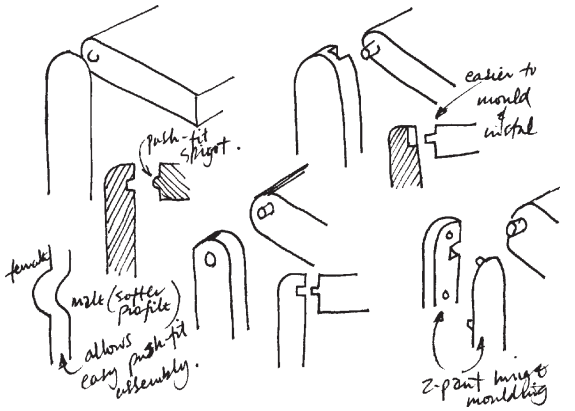

Using sketches to record ideas

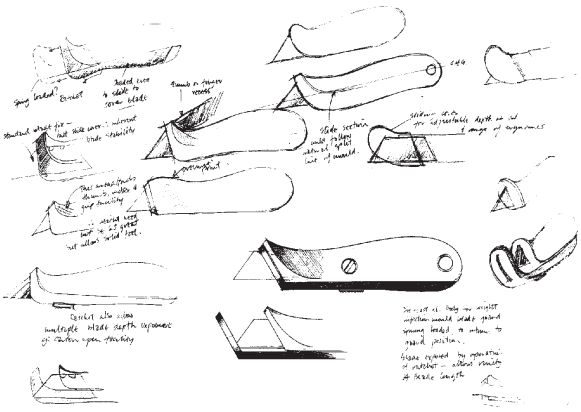

Using sketches to generate ideas

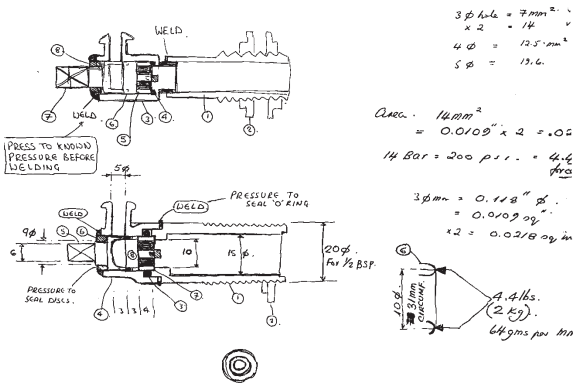

Using sketches to explore solutions

PICTORIAL VIEWS

If you want to produce a more precise view of an object, you need to use a drawing system. These can be divided into two categories:

- paraline drawings - these are made up of parallel lines to a set of rules;

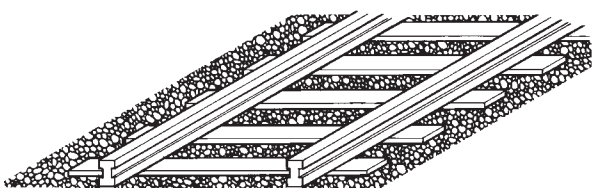

- perspective drawings - these take account of foreshortening and, although there are rules, they can be modified.

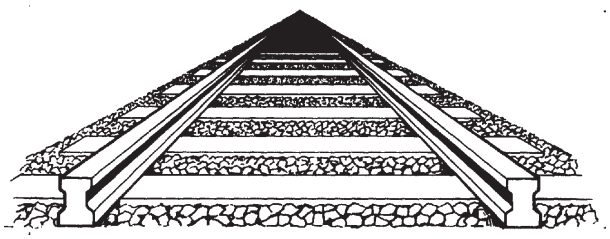

PARALINE DRAWINGS

Isometric projection

Rules

- Lines which are vertical on the object are vertical in the drawing.
- Lines which are horizontal on the object are at 30 degrees to the horizontal on the drawing.
- All measurements are true and must be made on the parallel lines.
- All circles appear as ellipses.

The three stages in drawing a torch in isometric projection are shown on the right.

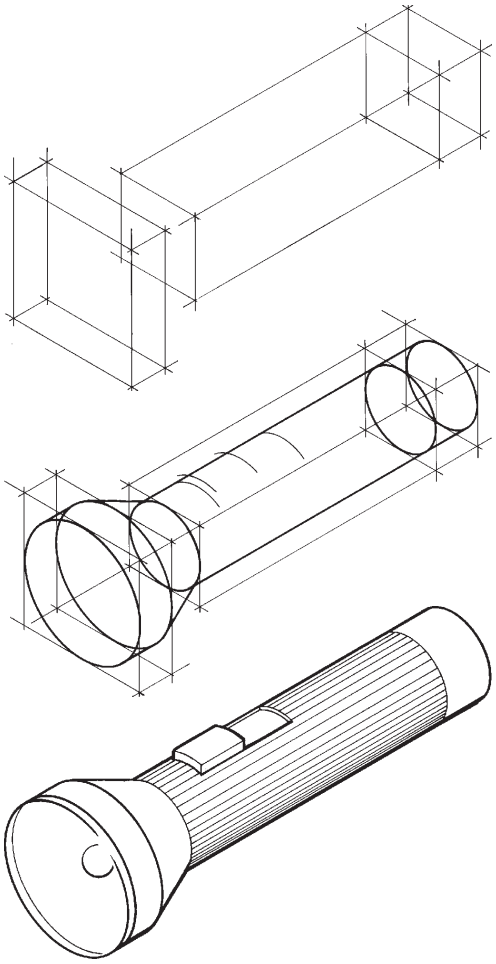

Planometric or axonometric projection

Rules

- The plan is true and drawn at an angle to the horizontal, usually 45 degrees or 30 degrees.
- All vertical edges remain vertical and are projected from the plan.
- All measurements are true and must be made on the parallel lines.
- Circles which are horizontal appear as circles while all others appear as ellipses.

The three stages in drawing a PET bottle used for containing soft drinks are shown, right, in planometric or axonometric projection.

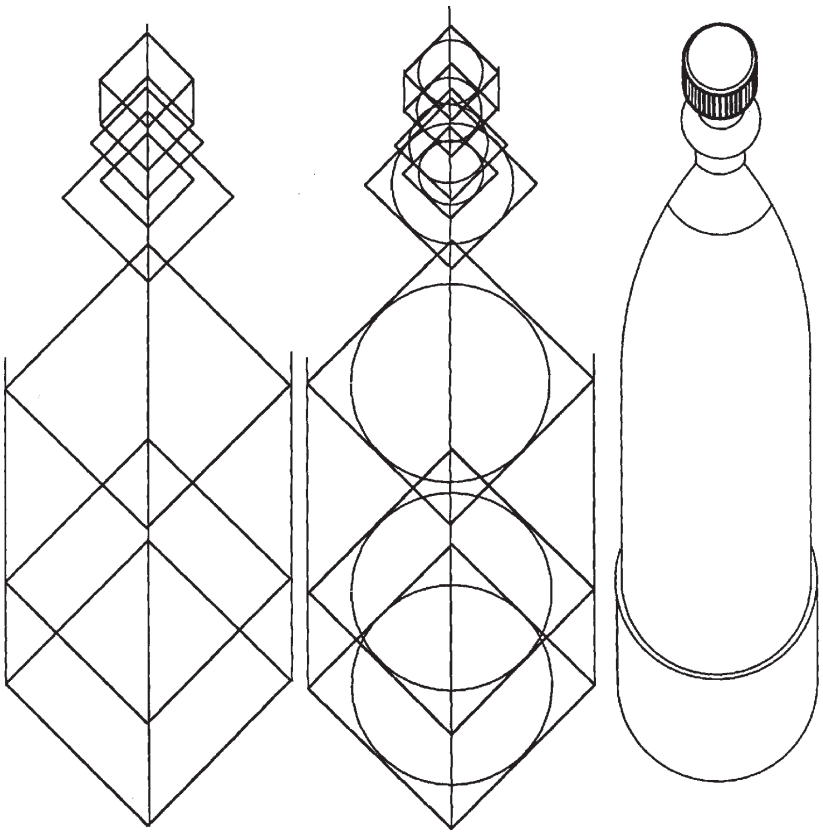

PERSPECTIVE DRAWINGS

One-point perspective

Rules
- All parallel lines converge towards a vanishing point where they disappear.
- Equal lengths foreshorten the further they are away from the viewing point.
- The surface closest to the viewing point is the only true one and all measurements must be made on it.

The four stages in drawing a tape measure in one-point perspective are shown on the right.

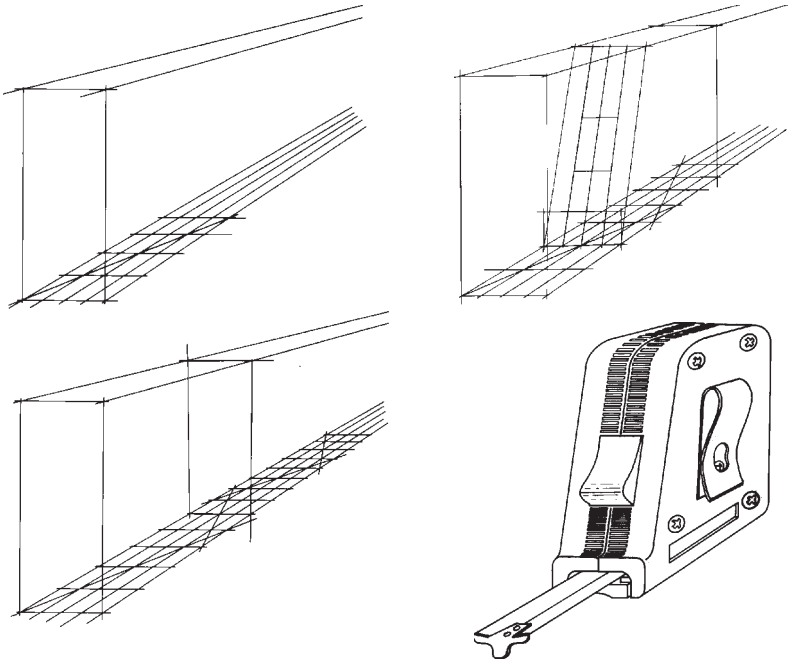

Two-point perspective

Rules
- All parallel lines converge towards one of the two vanishing points where they disappear;
- The vanishing points are positioned on the horizon line which is always horizontal;
- Equal lengths foreshorten the further they are away from the viewing point;
- The vertical edge closest to the viewing point is the only true one and all heights must be measured on it.

The stages in drawing a personal stereo in two-point perspective are shown on the right.

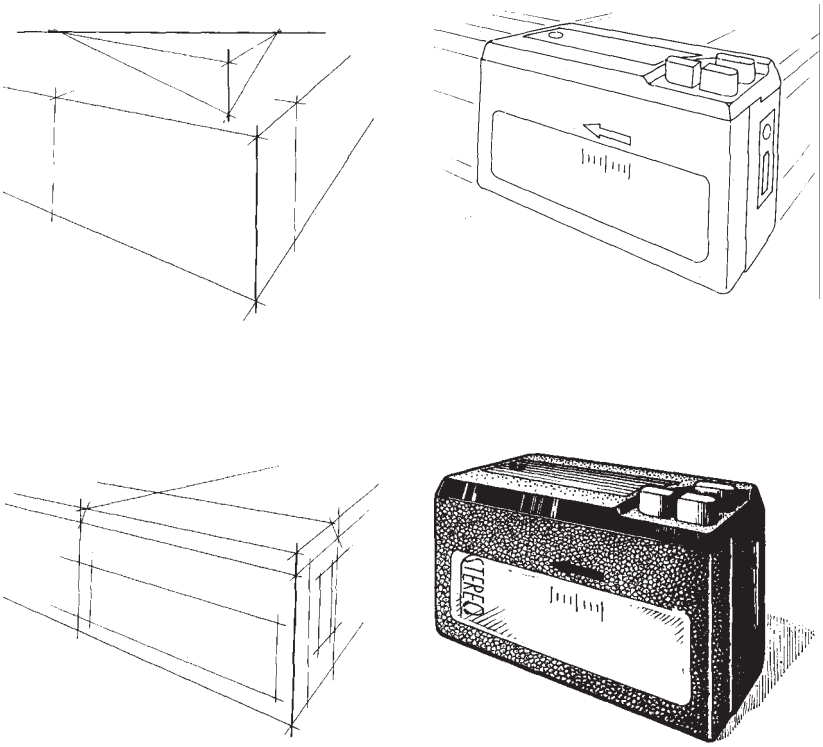

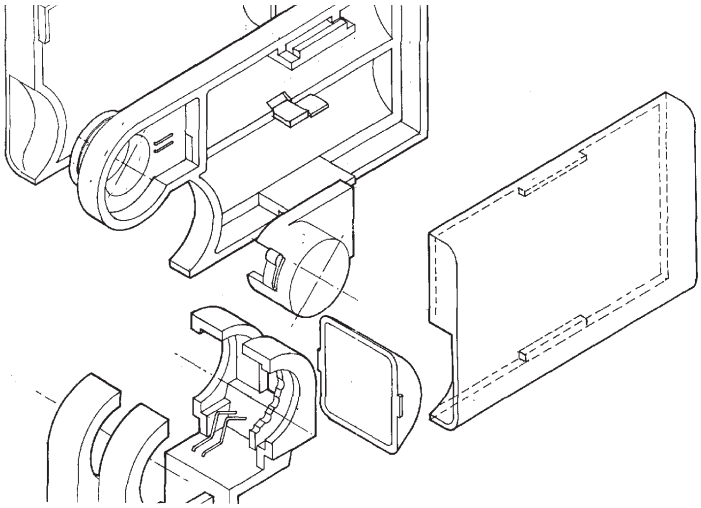

EXPLODED VIEWS

This type of view stretches the space between the various parts of an object. The different parts are positioned to show the relationship between them. These drawings illustrate the technique. This type of pictorial view might be used in a manual or an instruction book to show how things fit together or how they can be taken apart. Because the drawings are complicated, they are usually produced using a paraline system.

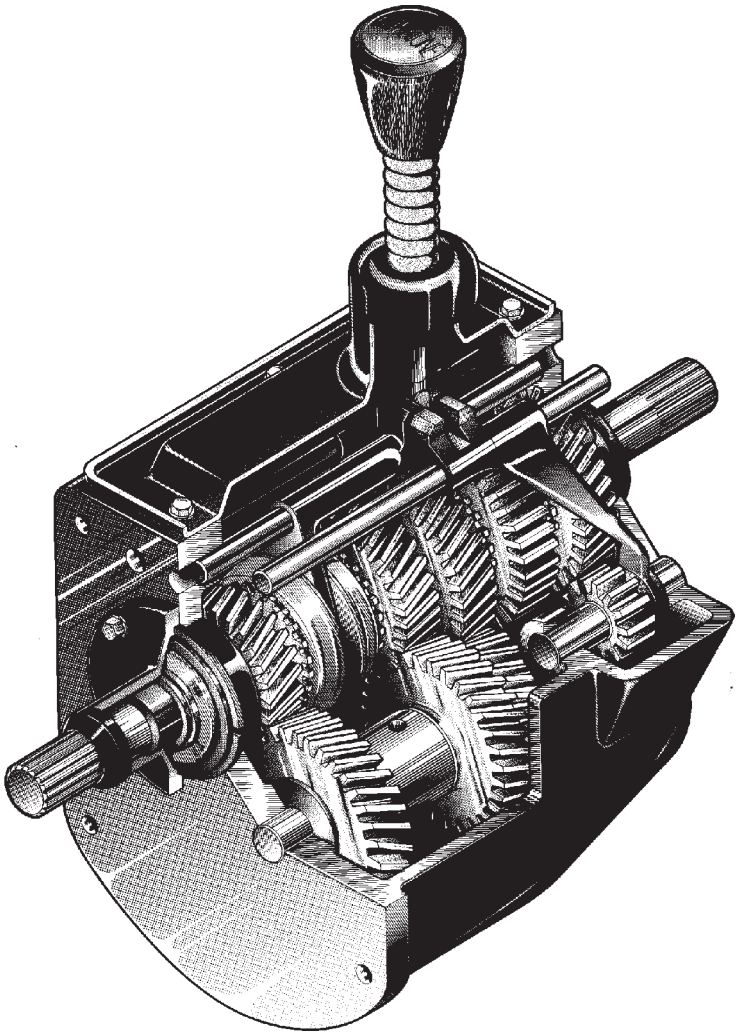

CUTAWAY DRAWINGS

This type of drawing cuts away part of the outer casing or shell of an object to show how the components fit together. It can be used to reveal the interior of anything from a gearbox to an aircraft. All the parts are shown in their actual position. This type of drawing is very good at explaining how something works as the relationship of the components is extremely clear. Because the drawings are complicated, they are usually produced using a paraline system.

Sometimes, when an object is extremely complex, exploded and cutaway drawings are used in conjunction.

PRODUCTION DRAWINGS

Production drawings or working drawings have to show every detail of an object so that it can be made exactly to the designer's specifications. All designers use the same language to communicate size, shape, form and accuracy - orthographic projection. This is a system of drawing which allows you to make very detailed drawings. Orthographic projection consists of producing a number of interrelated views of the same object; normally these views are drawn at right angles to each other.

There are two forms of orthographic projection in use throughout the world - first angle projection and third angle projection. Both systems are approved internationally and have equal status.

All orthographic drawings are made in relation to two planes - the horizontal plane and the vertical plane. The line where they intersect is called the XY line. These planes divide space into four quadrants. In a first angle orthographic projection, the object is imagined to be in the first quadrant. In a third angle orthographic projection, the object is imagined to be in the third quadrant. This determines the relationship of the views. When you draw the front or side of an object, it is called an elevation. When you draw the view from the top, it is called a plan. Which orthographic projection system has been used should always be indicated using the appropriate symbol.

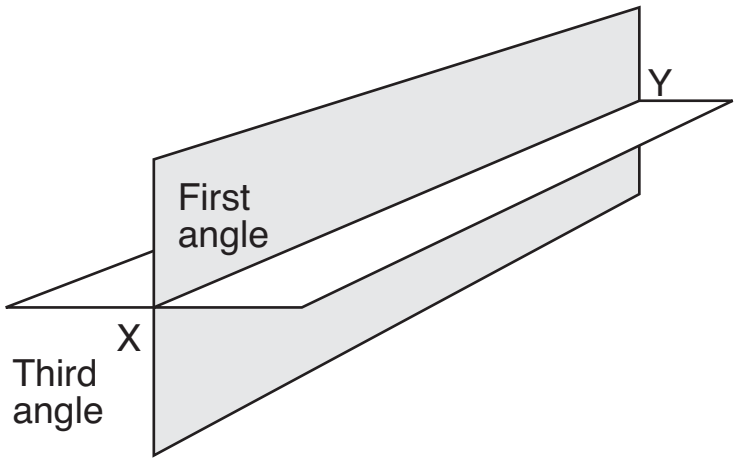

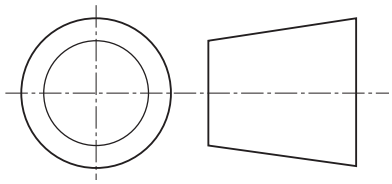

Symbol for third angle orthographic projection

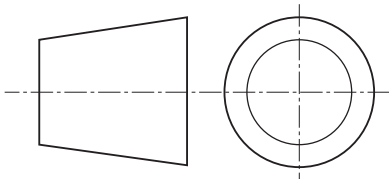

Symbol for first angle orthographic projection

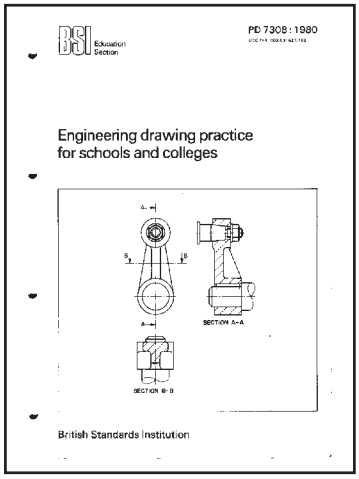

The rules or guidelines for these types of drawings are laid down by an organisation called the British Standards Institution (BSI). BSI is principally concerned with ensuring quality and consistency. There are a number of British Standards which control the language of drawing. The one which will be of most use to you is:

BS 308 Engineering Drawing Practice.

If you produce working drawings to this standard, anyone will be able to manufacture what you have designed; standardisation is essential in any manufacturing industry. An abbreviated version, PD 7308, provides you with all the information you need to produce working drawings to British Standards.

When producing a working drawing, you should use these standard types of lines.

The drawings show, in first angle orthographic projection, three views of a ceramic water valve.

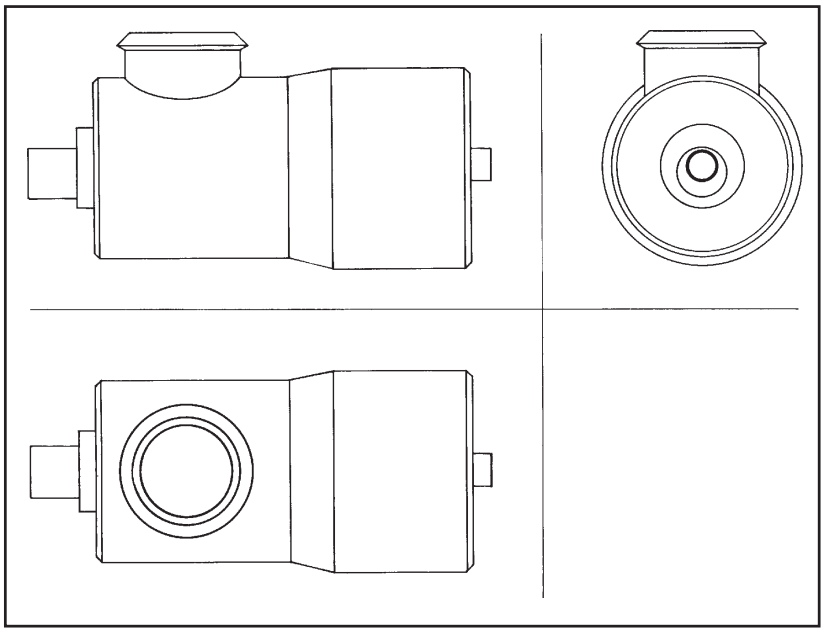

FIRST ANGLE

In first angle orthographic projection:

- The elevations are above the XY line.
- The plan view is below the XY line.
- The front elevation is the most important elevation, the plan is always projected from it.
- The left-hand end of the object is seen in the end elevation to the right of the front elevation.
- The right-hand end of the object is seen in the end elevation to the left of the front elevation.

The drawings show, in third angle orthographic projection, three views of a ceramic water valve.

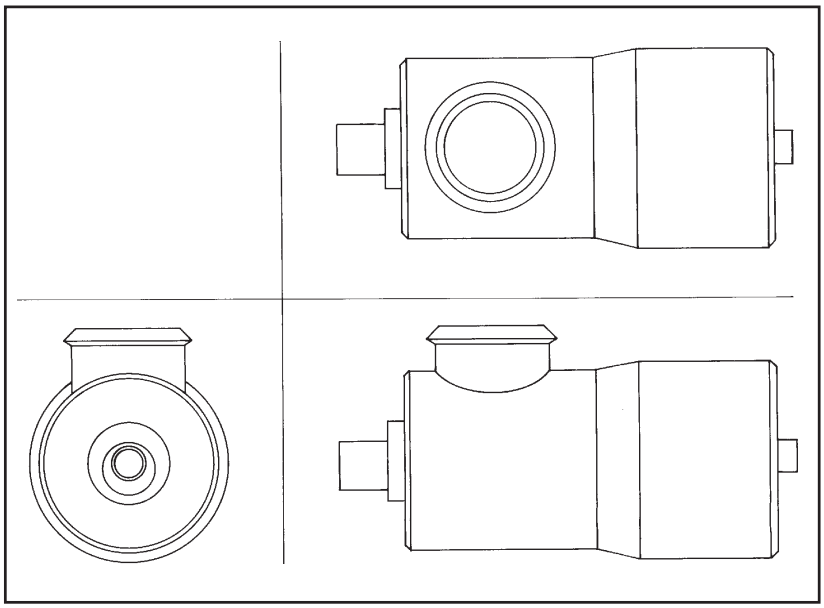

THIRD ANGLE

In third angle orthographic projection:

- The elevations lie in a horizontal line and are below the XY line.
- The plan view is above the XY line.
- The front elevation is the most important elevation, the plan is always projected from it.
- The left-hand end of the object is seen in the end elevation to the left of the front elevation.
- The right-hand end of the object is seen in the end elevation to the right of the front elevation.

HOW TO SHOW MORE INFORMATION

There are two important ways in which more information can be shown on an orthographic drawing.

1. Hidden detail
Internal edges which cannot be seen from the outside of an object can be shown using dotted lines. The valve has been drawn with dotted lines showing the hidden detail. The dotted lines provide a lot more information about the interior of the valve but they are often quite difficult to interpret.

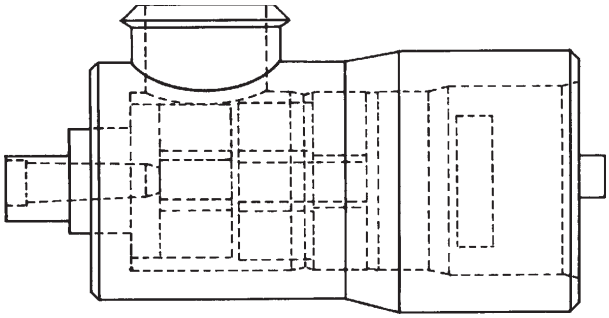

Hidden detail

2. Sectioned views
An object can be drawn as if it has been cut in half; this is called sectioning the drawing. In some sectioned views, only a quarter of the object is cut away. The front elevation of the valve has been sectioned; now you can see clearly the internal workings of the valve. There are some important rules to follow when drawing a sectioned view:

- Cross-hatch the cut surface at 45 degrees.
- Each part should be cross-hatched in a different direction or with different spacing between the cross hatched lines.
- Show the plane of section on an adjacent view.

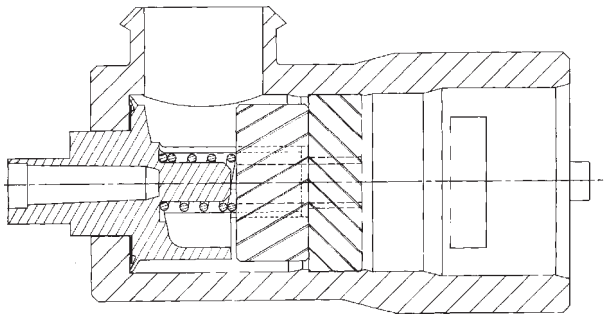

Sectioned view of valve

- Label the view.
- Do not show hidden detail on a sectioned view.

HOW TO SHOW DIMENSIONS

Dimensions provide numerical information on a drawing by indicating the size of the various parts, the distances between holes and how accurately a part needs to be made (i.e. the tolerance required). There are some important rules which you should follow when adding dimensions to a drawing:

- Dimension lines should be drawn as continuous thin lines. They should be lighter than the outline of the component to avoid confusion.
- Try to put all dimension lines outside the component.
- Always leave a small gap between the dimension leader line and the outline of the component.

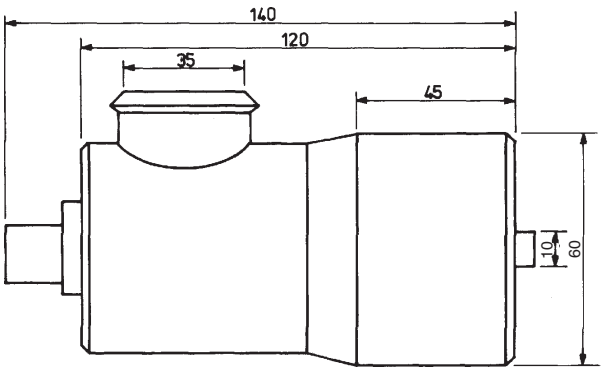

- The dimension ('the size') should be placed near the middle and slightly above the dimension line.
- Larger dimensions should be placed outside smaller dimensions.

You can see how these rules have been applied to the drawing of the valve.

USING CONVENTIONS

Some engineering components are too complicated to be drawn realistically. Conventions are used to show components such as screw threads. These are detailed in BS 308. All electrical components are shown by symbols on a circuit diagram; these are shown in BS 3939. Symbols for fluid power systems are given in BS 2917. BSI has published a compendium of standards for design and technology in schools - PD 7302. This is an extremely useful document as it covers many topics.

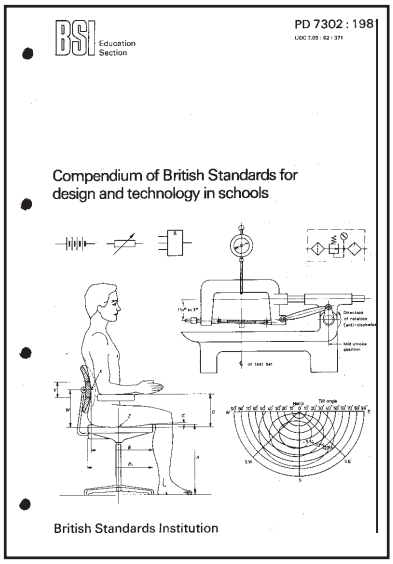

Title	Convention
External screw threads (detail)	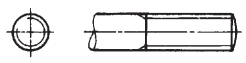
Internal screw threads (detail)	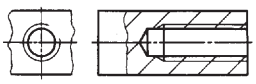
Screw threads (assembly) NOTE. Male thread takes precedence over female thread	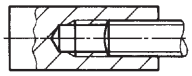

Description	Symbol	
Cylinders		
Single acting:	Detailed	Simplified
returned by an unspecified force		
returned by spring		
Double acting:		
with single piston rod		
with double-ended piston rod		

Description	Symbol
Light-sensitive *pn* diode	
Light-emitting diode LED	
Zener diode	
pnp transistor	
npn transistor	

WHAT OTHER INFORMATION SHOULD THERE BE ON A DRAWING?

It is traditional to put a border around an orthographic drawing. There should also be a title block which should include the following information:

- Descriptive title of the part or assembly.
- The projection symbol - first or third angle.
- The unit of measure.
- The scale of the drawing.
- The material of which the component is made.
- Name of the draughtsperson and the date.
- Sheet number and number in series e.g. 3 of 10.
- If the product is made up of a number of components, a parts list.

PROJECTION	DESCRIPTION	UNIT OF MEASURE: *mm*	MATERIAL/PROCESS
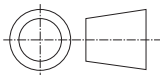	*Valve casing*	SCALE: *1:1*	*Acetal - injection moulded*
		NAME: *Pete*	
		SHEET NUMBER: *3 of 5*	

COMPUTER-AIDED DRAWING (CAD)

Although you will learn how to draft working drawings to British Standards using traditional instruments, you should also have the opportunity to make these drawings using computer aided techniques.

Computer aided drawings offer many advantages.

- They give constant drawing quality. Lines, dimensions, details etc. are independent of the individual skill of the draughtsperson.
- Commonly used symbols used in electronics, pneumatics and hydraulics and frequently used components such as nuts and bolts can be easily accessed from a library.
- They are cost-effective. Drawings can be easily revised and edited and time and effort saved in repetitive parts of drawings.

CAD models components in three dimensions as well as producing two dimensional, orthographic views. There are three main types of models:

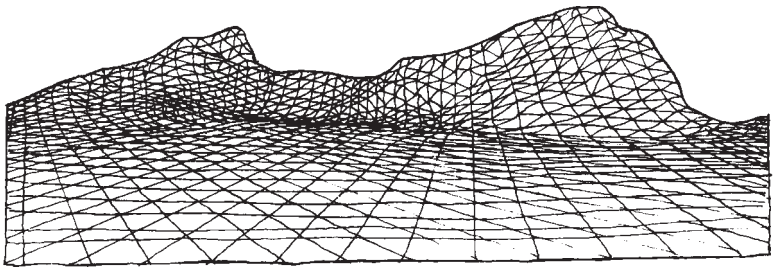

Wireframe model of a landscape

1. Wireframe models
These look as if the object is made up of thin wires connected to all the edges and faces of the component.

2. Surface models
The generated image is made up of the outer surface of the object and therefore gives a good impression of the design. It is particularly useful for displaying complex curved shapes.

3. Solid models
This is similar to the surface model but it also has information about the volume and mass of the object - not just the outer shell. This means that sectional views can be obtained readily.

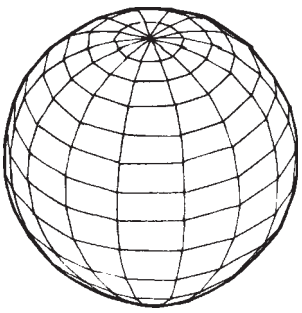

Surface model of sphere

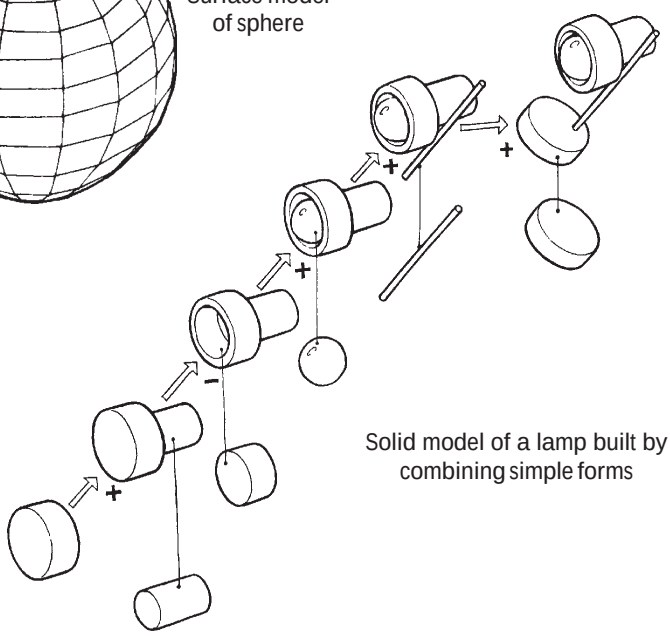

Solid model of a lamp built by combining simple forms